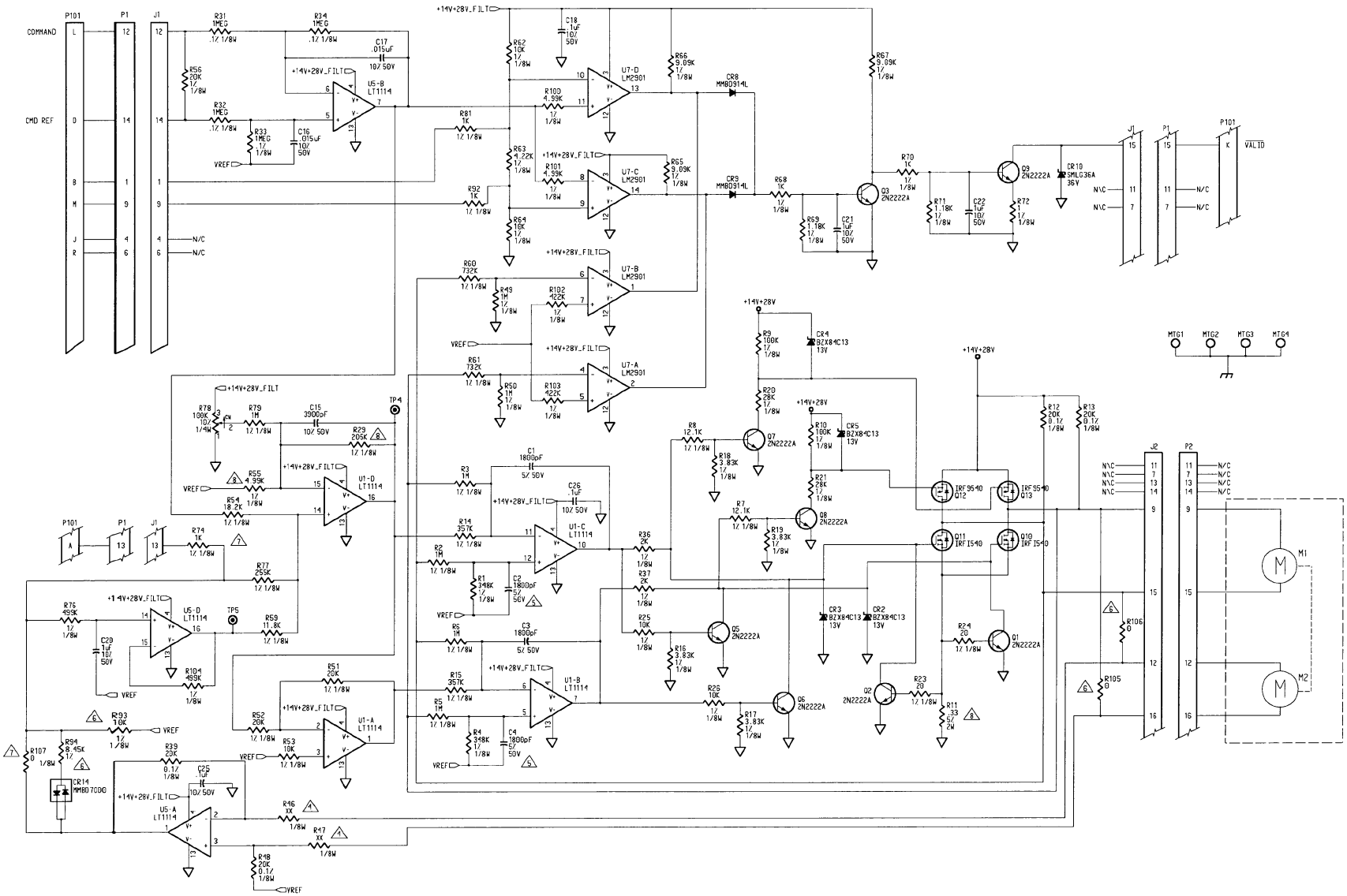

FIGURE 6-13 SERVO BOARD SCHEMATIC 002-09656-02
(Dwg No 002-09656-02, Rev -, Sheet 1 of 2)