Appendix C Bottom Connector Interconnect

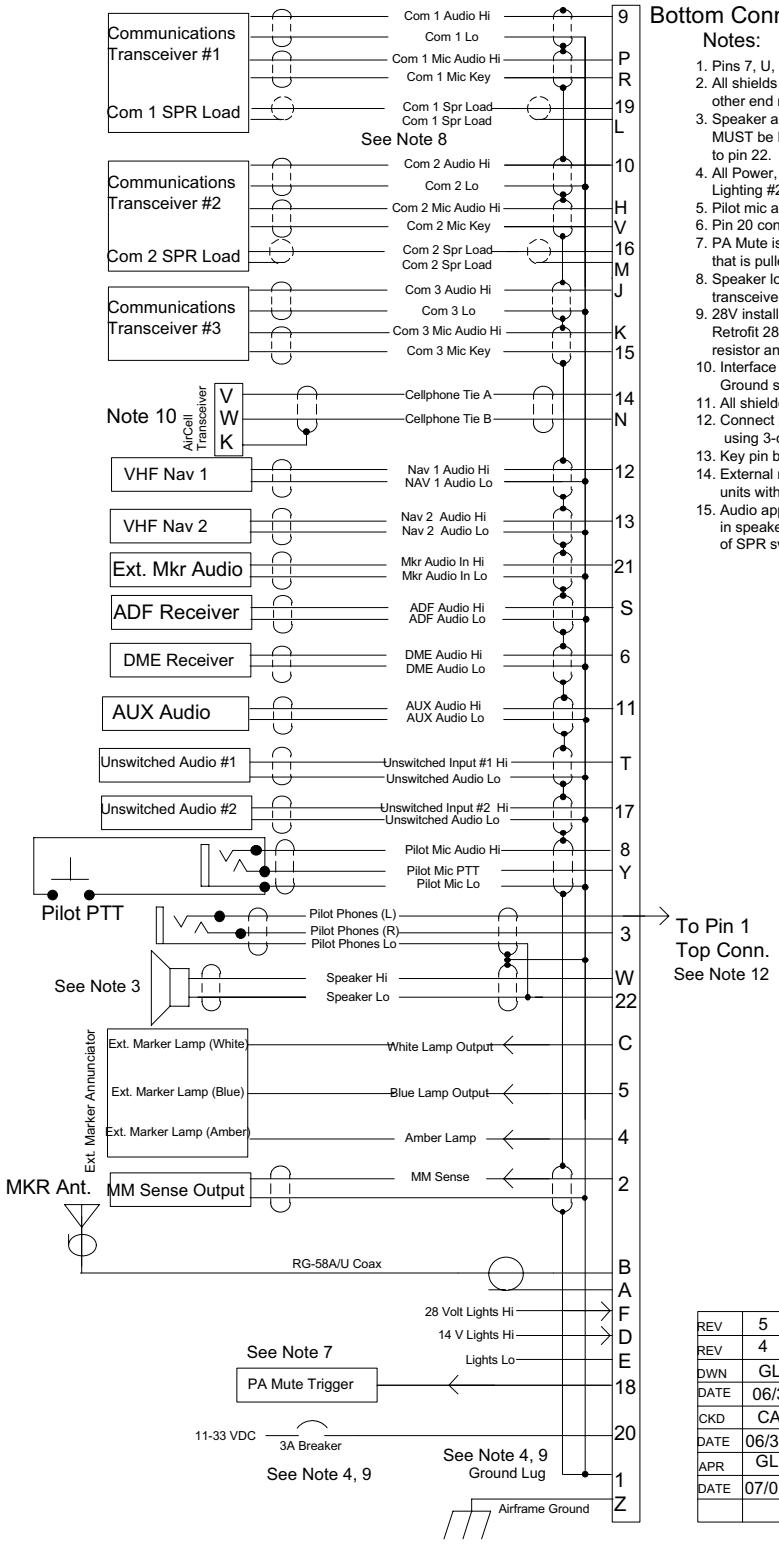

Bottom Connector, J1

Notes:

1. Pins 7, U, and X not used.
2. All shields should be grounded at audio panel only. other end remains floating.
3. Speaker and Pilot Headphone ground returns MUST be kept separate and connected to pin 22.
4. All Power, and Ground wires must be #18 gage wire Lighting #22 AWG, other wires minimum #24 AWG
5. Pilot mic and headphone jacks must be isolated from ground.
6. Pin 20 connected through a 3 A breaker.
7. PA Mute is a TTL level logic output that is pulled low when PTT active.
8. Speaker loads may be required on some transceivers. Consult manufacturer's information.
9. 28V installations require a 3 A breaker. Retrofit 28V installations may remove dropping resistor and change breaker to 3A.
10. Interface information shown for AirCell phones only. Ground shield at AirCell end only.
11. All shielded wires must be MIL 22750 or 27500.
12. Connect pilot headphone (L) to top connector, Pin 1, using 3-conductor wire.
13. Key pin between pin 7 and 8.
14. External marker audio input to Pin 21 for units without internal receiver.
15. Audio applied to Pins T and 17 is always presented in speaker, pilot and copilot headphones, regardless of SPR switch or PTT.

REV	5	RDATE	9/15/00	BY	GLP
REV	4	RDATE	3/2/99	BY	GLP
DWN	GLP	PS ENGINEERING® INCORPORATED			
DATE	06/30/98				
CKD	CAJ	9800 MARTEL ROAD, LENOIR CITY TN 37772			
DATE	06/30/98	TITLE: PMA7000 Bottom Connector Wiring			
APR	GLP	SIZE A	DOCUMENT NUMBER: 120-070-0204	REV 4	
DATE	07/01/98	DATE: 07/01/98	SHEET 1 OF 1		